71959-00001.D

i

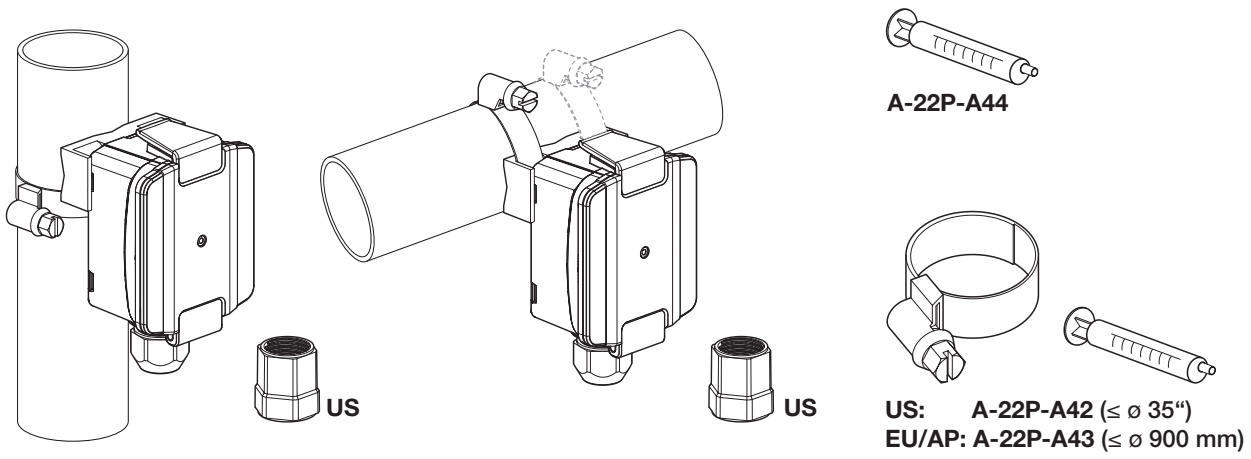

1

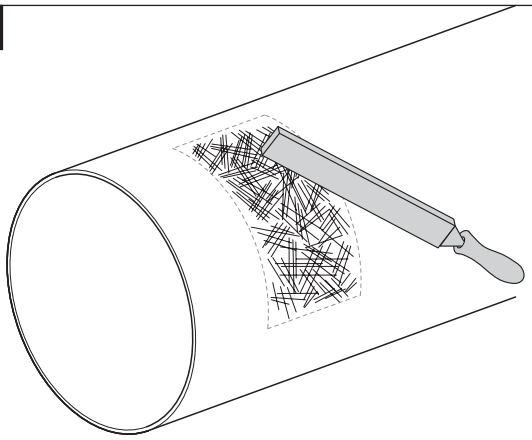

2

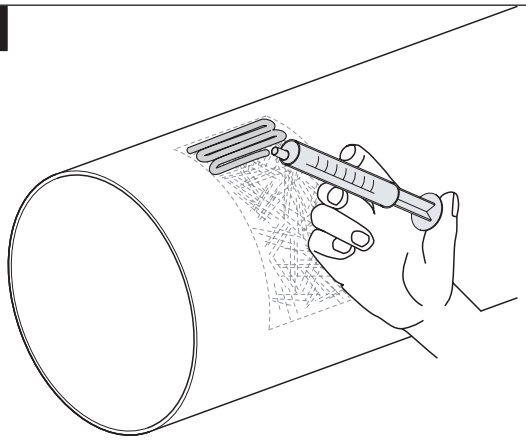

3

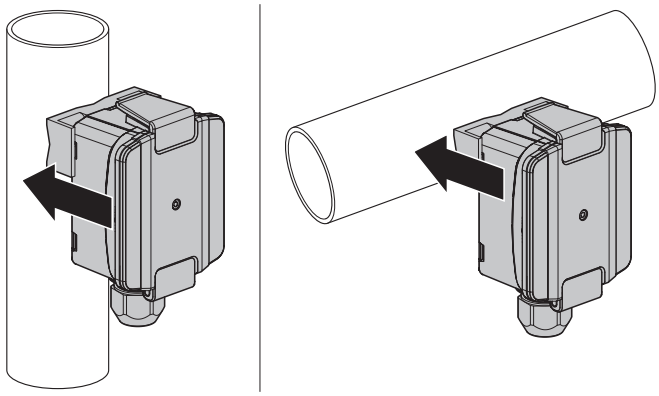

4

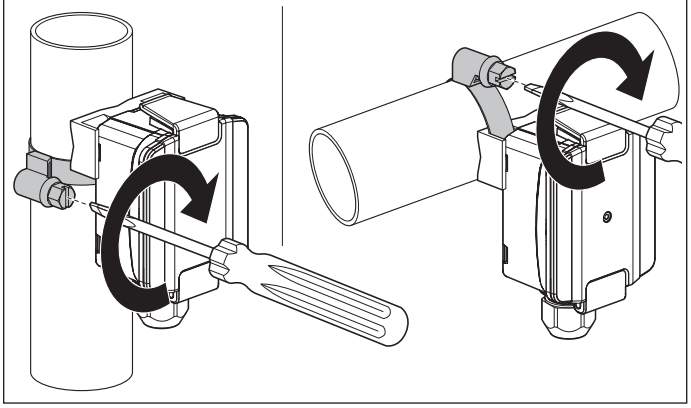

www.belimo.com/safety

i

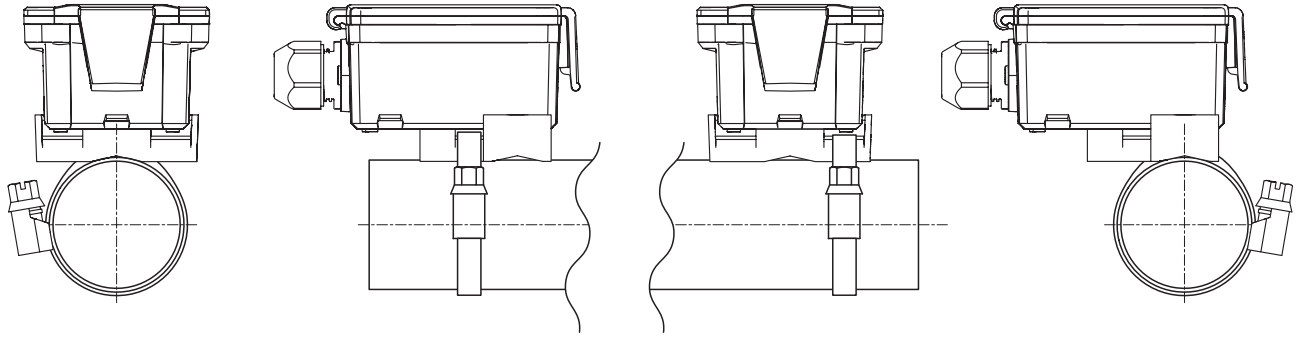

5

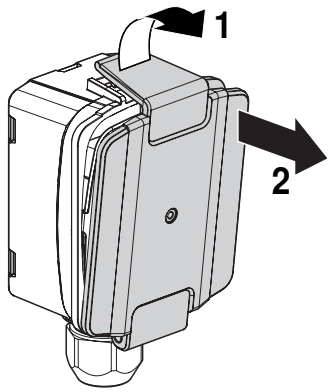
1
2

6

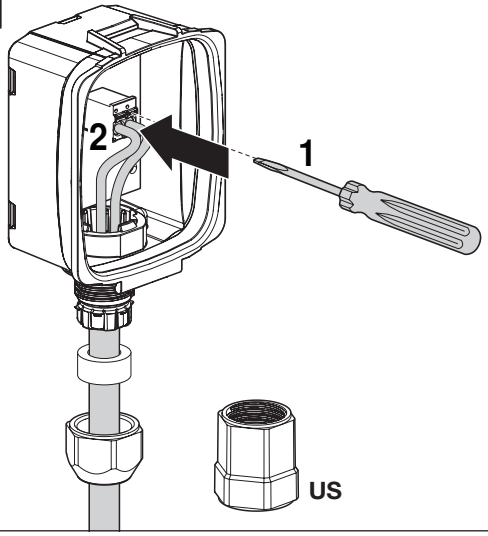
2
1
US

7

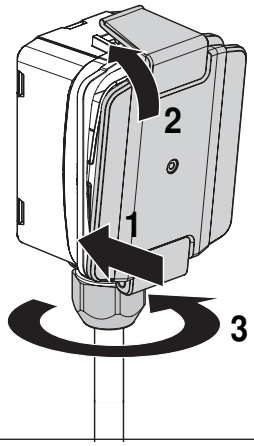
2
1
3

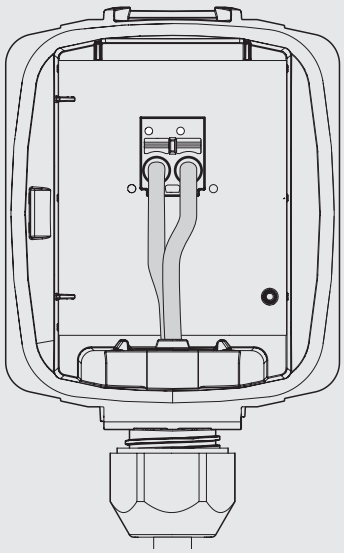

ST+
ST–

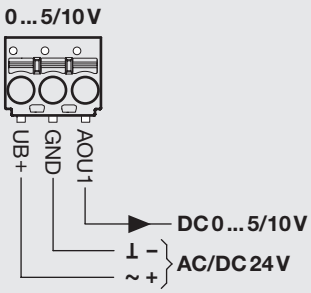
0 ... 5/10 V
UB+
GND
AOU1
DC 0 ... 5/10 V
⊥ –
~ +
AC/DC 24 V

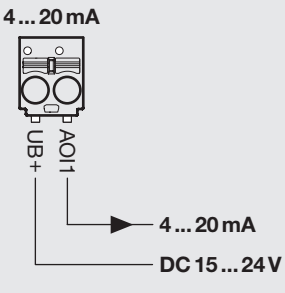
4 ... 20 mA
UB+
AOI1
4 ... 20 mA
DC 15 ... 24 V